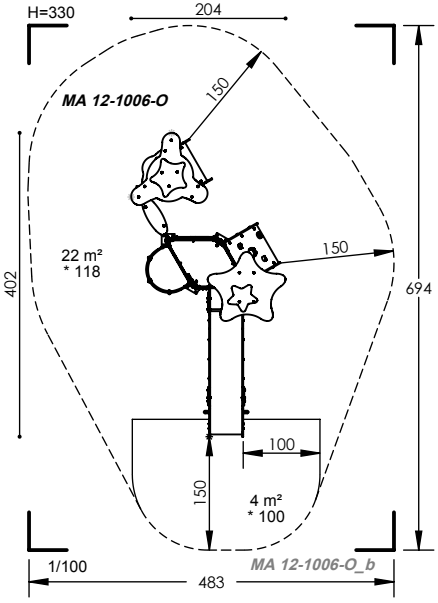
H=330
204
150
MA 12-1006-O
22 m²
* 118
150
402
694
100
150
4 m²
* 100
1/100
MA 12-1006-O_b
483