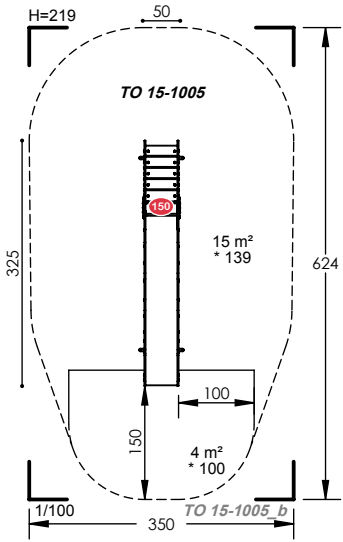
H=219
50
TO 15-1005
150
15 m²
* 139
325
624
100
150
4 m²
* 100
1/100
350
TO 15-1005_b