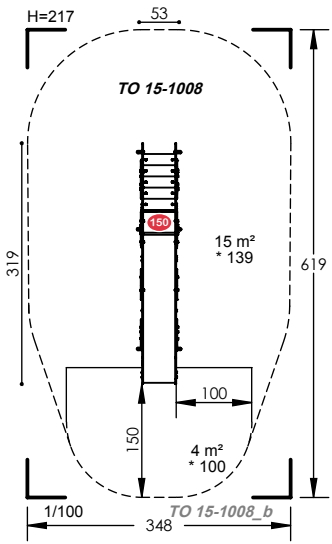
H=217
53
TO 15-1008
150
15 m²
* 139
319
619
100
150
4 m²
* 100
1/100
TO 15-1008_b
348