Age Range Age > 2

No. of Users 2

Free Height of Fall > 0.6m

Assemble Time 3-4 H

No. of Activities 2

Impact Area N/A

Sand Conveyor with Decks

EYA-011

An interactive timber play unit featuring a sand conveyor, raised decks, and engaging moving parts to support collaborative and active play.

Made from timber and colourful HDPE, the unit includes a stainless steel rail, chains, and a pulley, along with two timber decks, a sand conveyor, a sand crane, and scales. Bespoke HDPE colours are available on request.

This unit measures 3979mm in length, 1060mm in width, and 2200mm in height, offering a hands-on sand play experience for groups.

Sand not included

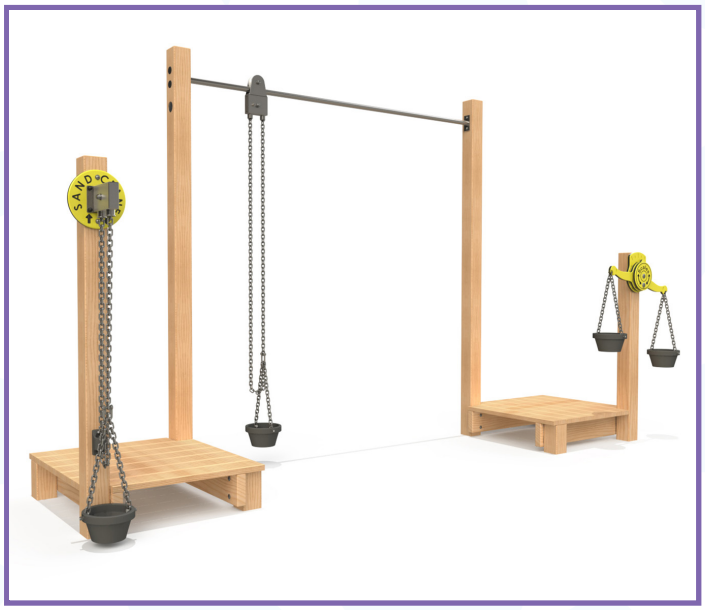

Technical Information

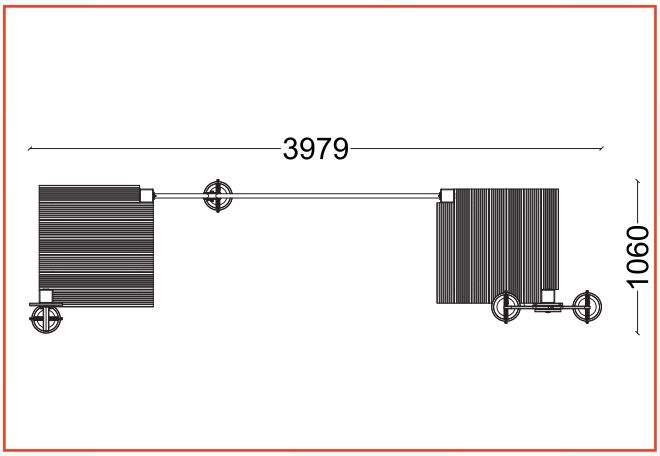

Materials

Our timber play equipment is constructed from laminated Glulam timbers for all load-bearing and structural posts. Made from European Redwood heartwood, the laminates are bonded with moisture-resistant, durable, and structurally approved adhesive, with grains aligned for maximum strength. Sourced from FSC-approved, sustainably managed European forests, Glulam ensures both safety and environmental responsibility.

Manufactured from high-grade waste which rescues countless tons of scrap from ending up in landfill. Renowned for its exceptional durability, our HDPE is virtually unbreakable, engineered to withstand the most challenging conditions. Moreover, it boasts excellent UV stability.

Surfacing	Surface Measurements
Grass Matting	N/A
Grass Matting (Wear Area)	N/A
Wetpour	N/A

No safety surface required as critical fall height is less than 600mm.
However, we suggest allowing an appropriate free space around the item in compliance with BS EN1176.

Data is subject to change without prior notice.

Unit 9A, Triangle Business Park, Wendover Road, Buckinghamshire, HP22 5BL T: 01296 614448 E: info@caloo.co.uk